OLYMPUS SERIES

HEIGHT ADJUSTABLE ELECTRIC BASES

Designed to move with you!

Heartwood Distributors Ltd.

2 LEG & 3 LEG MODELS

Base Finishes

Black (BL)

Silver (SL)

Features

1. Ergonomic, sit to stand, height adjustable base
   Extended height range 27.75" to 45.5" with 1" top
2. Sturdy steel frame, cross bar and foot
3. Slimline foot with contemporary styling
4. Key Pad with four programmable memory positions
5. Flexibility - designed to work with the **NEW** Innovations tops (sold separately) or RETRO FIT your existing top to this unit
6. Two attractive powder coat finishes
7. Offset foot leaves room for keyboard tray or other accessories
8. Product is **IN-STOCK**

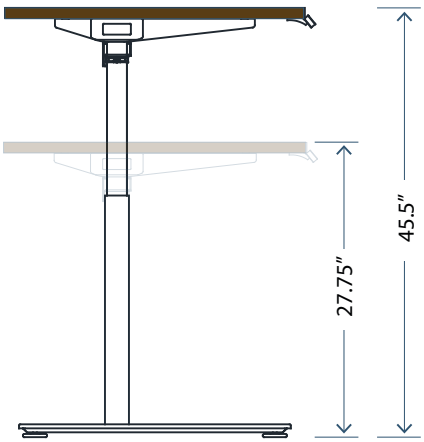

Model:	Description:
OLY-E1-2LEG	Straight Desk
OLY-E1-3LEG	L Shape Desk

5 LIMITED WARRANTY YEAR

THE IN-STOCK ADVANTAGE

ECO STORY

www.heartwooddl.com

Easy to use key pad with 4 programmable memory positions

Adjustable glides for easy leveling on uneven surfaces

Technical Specifications:

1. Anti-collision function - stops automatically if it hits an immovable object
2. Sturdy, 2-stage, steel frame design
3. Operated at 1.5" per second
4. Whisper quiet <50dB
5. Single motor
6. Hex rod drive system
7. Lifting Capacity: 220lbs
8. CSA/UL Certified

Accessory: Wire Management
100-WM1300

Accessory: Hanging CPU holder
100-2-HPCU

Innovations Laminate Tops

Model:	Description:
INV-2448TOP	47.25"W x 23.75D x 1"H
INV-3060TOP	59.25"W x 29.5"D x 1"H
INV-3066TOP	65"W x 29.5 D x 1"H
INV-3072TOP	71"W x 29.5"D x 1"H
INV-2436TOP (Return Only)	35.5"W x 23.75"D x 1"H

Examples:

INV-2448TOP + OLY-E1-2LEG

INV-3060TOP + OLY-E1-2LEG

INV-3066TOP + OLY-E1-2LEG

INV-3072TOP + OLY-E1-2LEG

INV-3060TOP — INV-2436TOP or INV-2448TOP + OLY-E1-3LEG

INV-3066TOP — INV-2436TOP or INV-2448TOP + OLY-E1-3LEG

INV-3072TOP — INV-2436TOP or INV-2448TOP + OLY-E1-3LEG

Laminate Top Finishes:

Autumn Maple (AM) | Evening Zen (EZ) | Grey (GR) | Grey Dusk (GD) | Hardrock Maple (HM) | Pure White (PW) | Royal Mahogany (RM) | Sugar Maple (SM) | Winter Wood (WW)

Heartwood Distributors Ltd.

Choose high quality, price sensitive products that are **IN-STOCK** and ready for next day shipping.

www.heartwooddl.com

Contact your local dealer:

251 Adams Rd, Kelowna, BC V1X 7R1
T: 1 800 567 3060
F: 250 765 1213